ANDRIS RS 10 L

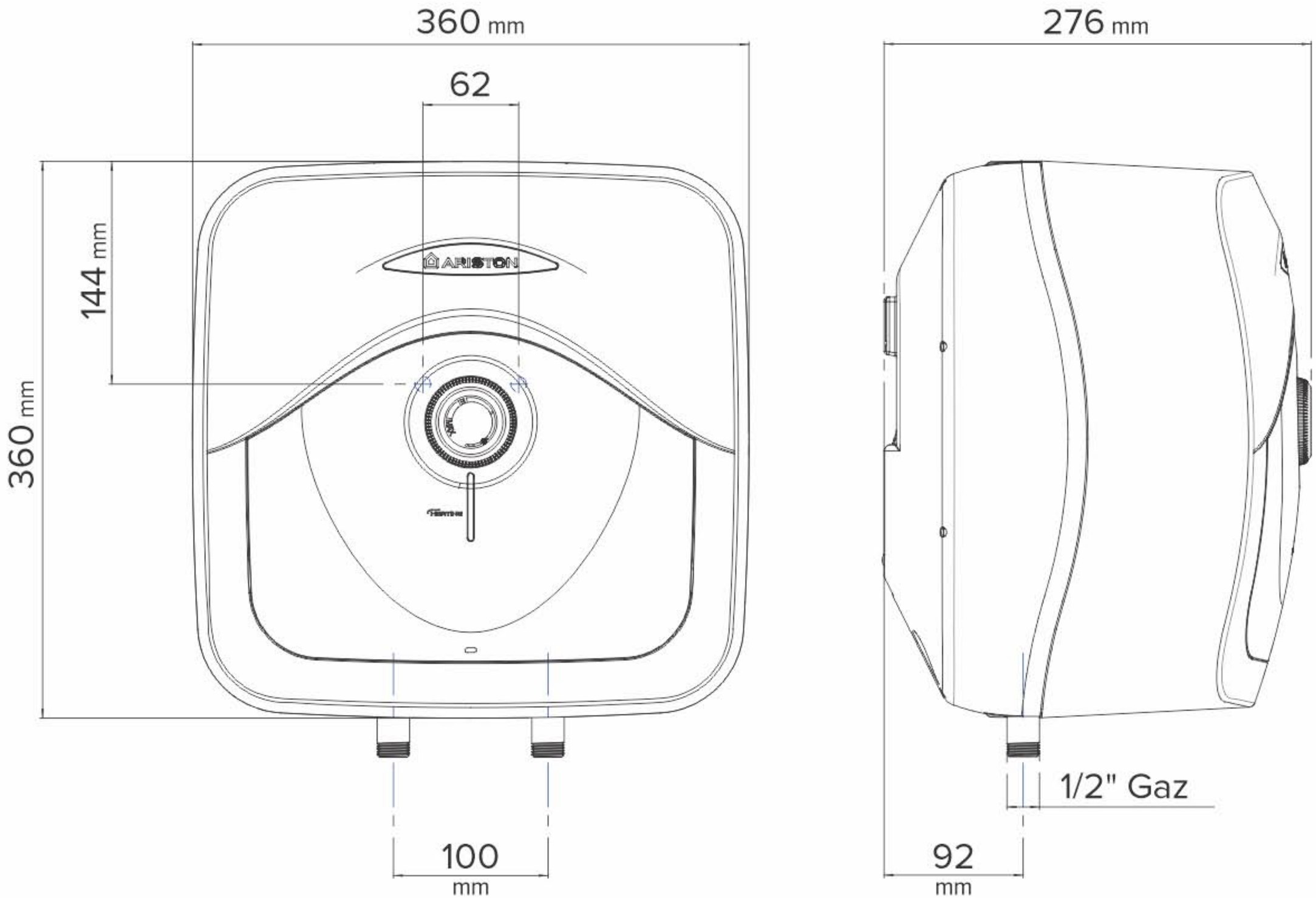

ARISTON