(1) ×5	(9) ×4 M6*20mmL
(2) ×1	(10) ×4 M6*25mmL
(3) ×1	(11) ×6 M6*45mmL
(4) ×1	(12) ×2 Φ18*Φ6*1.5mmT
(5) ×1	(13) ×1L×1R
(6) ×1	(14) ×1 5mm
(7) ×1	
(8) ×1L×1R	

1

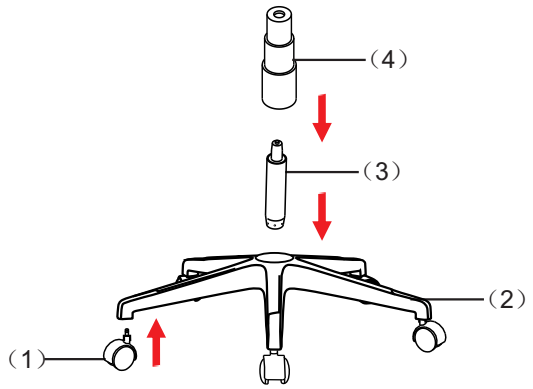

2

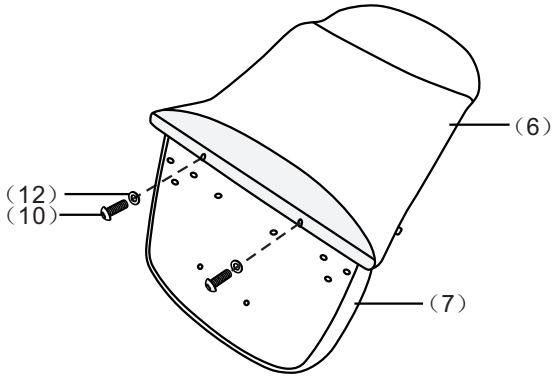

3

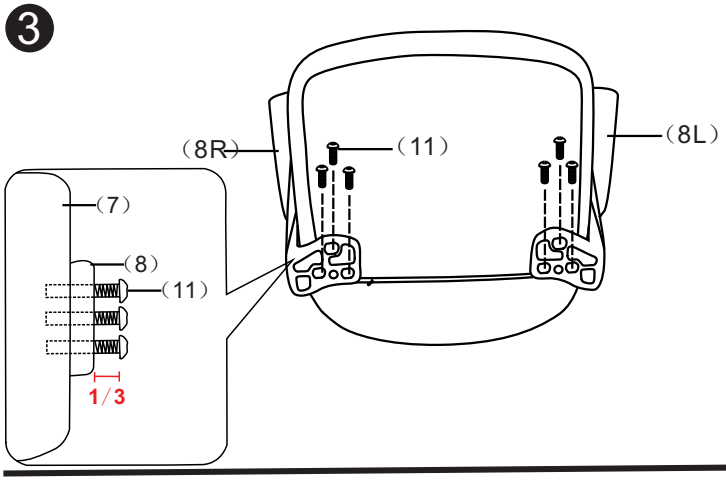

4

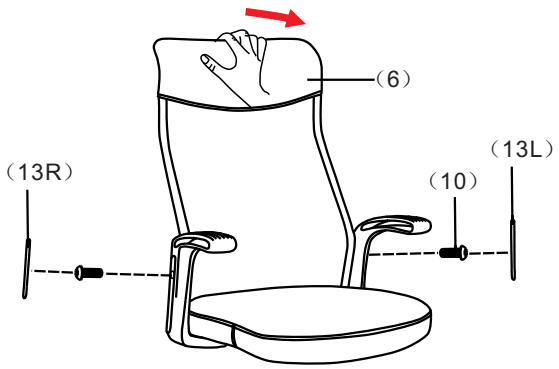

5

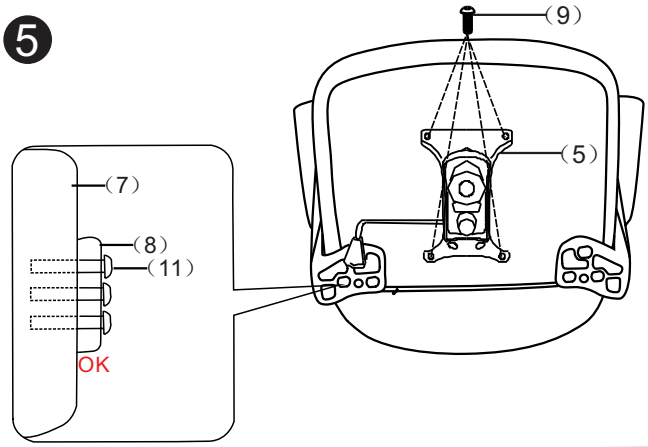
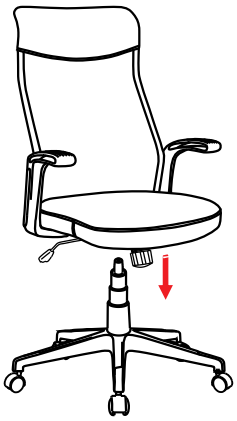
6